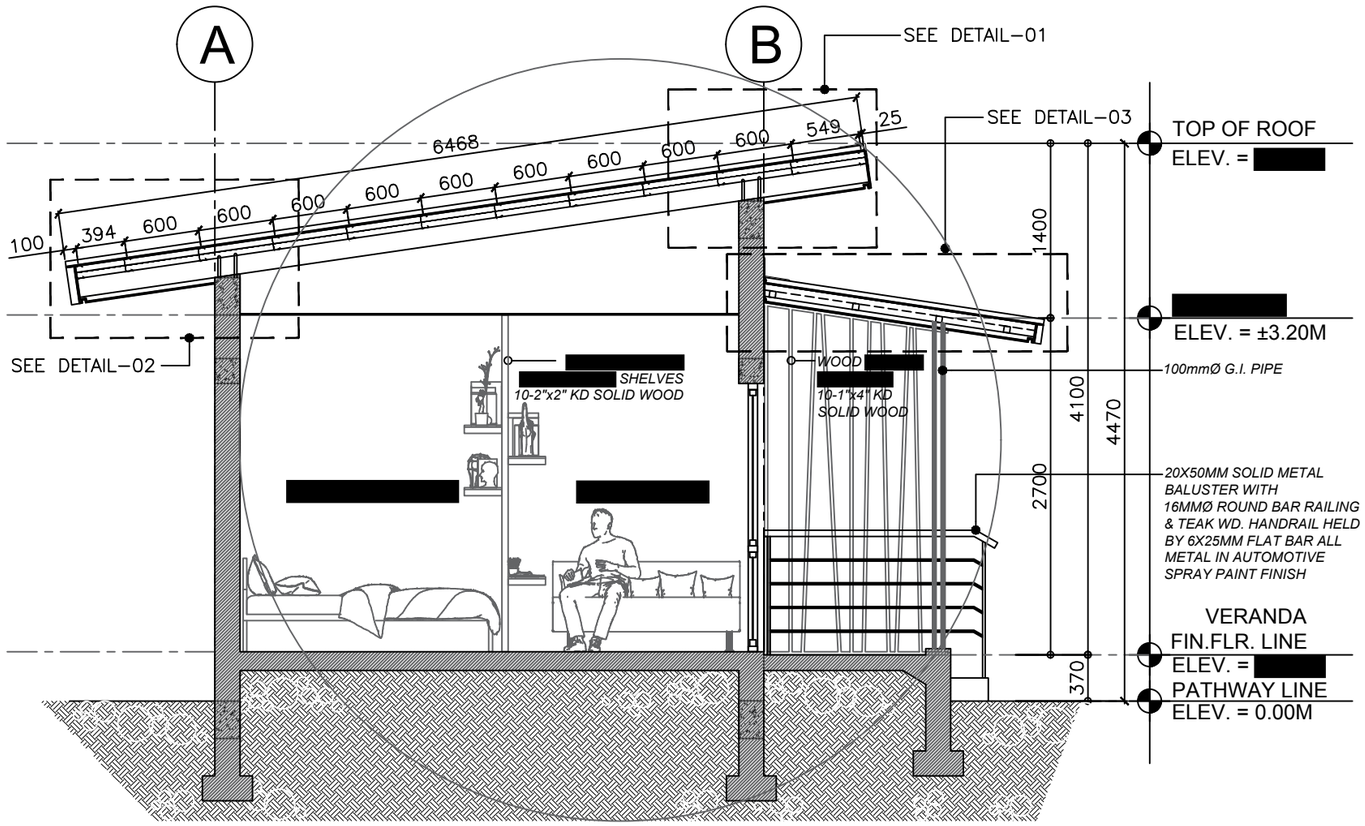

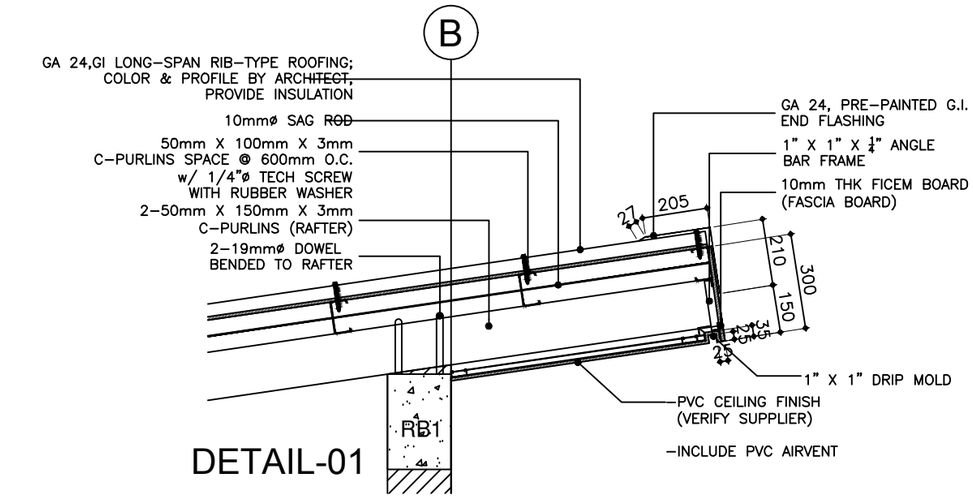

DETAIL-01

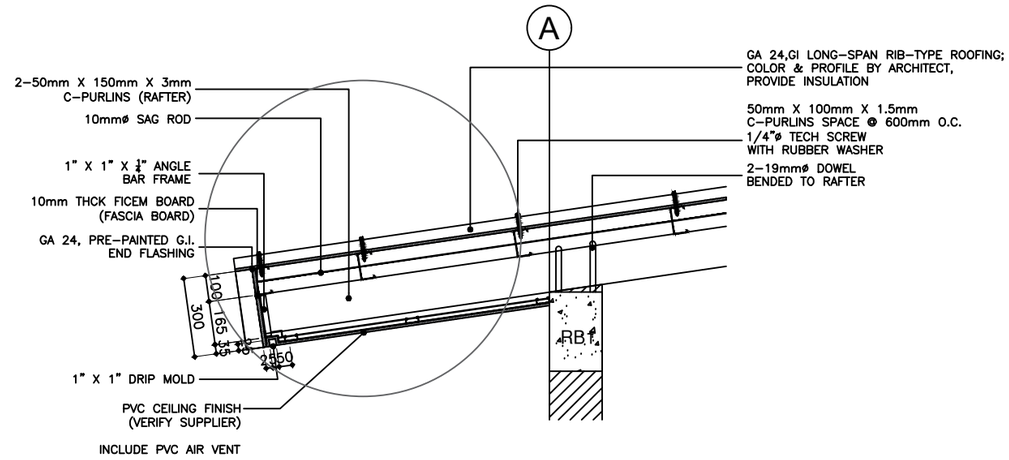

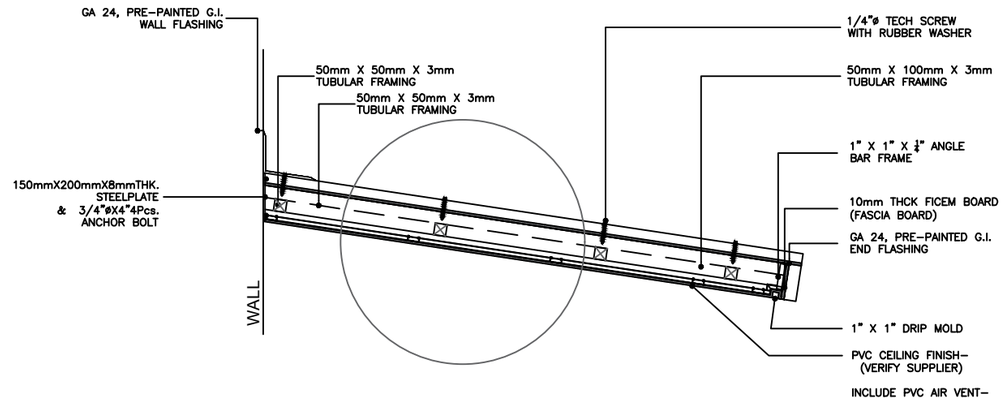

1 / S-200 ROOF FRAMING DETAILS

SCALE: [redacted]

REPUBLIC OF THE PHILIPPINES
DEPARTMENT OF SOCIAL WELFARE AND DEVELOPMENT
[redacted], [redacted], BRGY.ZONE [redacted],
KORONADAL CITY, SOUTH COTABATO, FO XII

PREPARED BY:
[redacted]
[redacted] BY:
ENGR. [redacted]

RA 9266 SECTION 33
Drawings and specifications and other contract documents duly signed, stamped or sealed, as instruments of service, are the intellectual property and documents of the architect, whether the object for which they are made is executed or not. It shall be unlawful for any person to duplicate or make copies of said documents for use in the repetition of and for other projects or buildings, whether executed partly or in whole, without the written consent of the architect or author of said documents.

REVIEWED AND VERIFIED BY:
ENGR. ROLLY A. TEOFILO
PDO IV FOR INFRA

PROJECT TITLE:
CONSTRUCTION OF 2-UNITS ISOLATION BUIDLING (11-ROOMS)

LOCATION:
RRCY, BRGY. BUKAY PAIT, [redacted] SOUTH COTABATO

APPROVED BY:
CEZARIO JOEL C. ESPEJO
REGIONAL DIRECTOR
[redacted]

SHEET CONTENT
ROOF FRAMING DETAILS

REVISIONS

MARK	DATE

PROJECT NO.	
DRAWN BY :	CEB
DESIGNED BY :	
DATE :	--
CHECKED BY :	FCE

SHEET NO.
[redacted]